38th Annual AHCA Seminar & Expo

September 18-20, 2022 (Sun.-Tues.) | *Disney's Coronado Springs* Resort

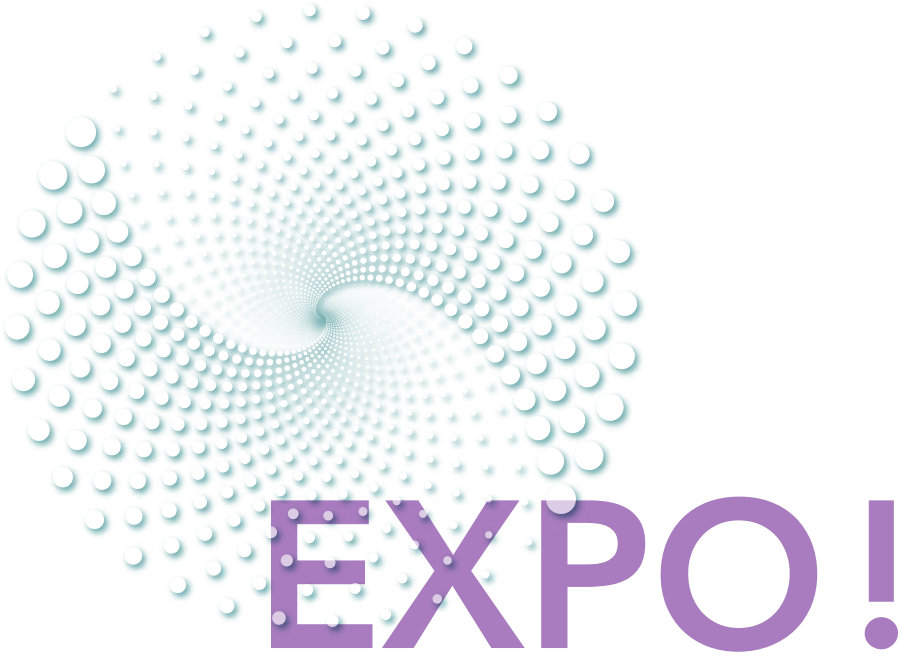

EXHIBITOR PROSPECTUS

AGENCY FOR HEALTH CARE ADMINISTRATION
STATE OF FLORIDA

38th Annual AHCA Seminar & Expo

The AHCA Seminar, in its 38th year, is unequivocally the state's most important meeting for Florida's health care facility leaders working in health care facility design, construction, and management.

Who attends the AHCA Seminar

AHCA Seminar attendees are a unique and comprehensive group of leaders from throughout the state of Florida working in health care facility design, construction, and management -- architects, engineers, health care facility directors and facility engineers, contractors, as well as AHCA (Agency for Health Care Administration) review architects and engineers, and Fire Protection Specialists from AHCA Field Offices.

Florida's health care facility professionals made an enthusiastic return to the 2021 AHCA Seminar & Expo after a year's lapse in 2020. Uncertain and changing conditions along with travel restrictions made registration predictions impossible, but with over 1250 seminar registrants in attendance, as well as an additional 400+ individuals representing their companies in the Expo, the 37th Annual AHCA Seminar & Expo was a spectacular success by any measure.

The AHCA Seminar & Expo provides the ideal environment for sharing and learning not only inside the classroom, but from each other outside the classrom and at the Expo. We expect our numbers to increase for the upcoming meeting in 2022. Reserve your booth quickly to ensure your space.

Who should exhibit in the AHCA Expo

This is the most important meeting this year for Florida's health care facility professionals, both for its critical education and for sheer numbers of health care facility professionals gathered in one place. For companies whose target audience are the decision makers for health care facilities, design or owner/management side, your participation as an AHCA Expo exhibitor provides your company maximum, cost-effective exposure in the ideal environment to engage and connect to this group.

AHCA Seminar Attendees At-A-Glance

Based on the past five years of on-site meetings, an average of over 1200 individuals register for the AHCA Seminar each year. On average, 25% of those registrants (over 300) are health care facility directors and health care engineers.

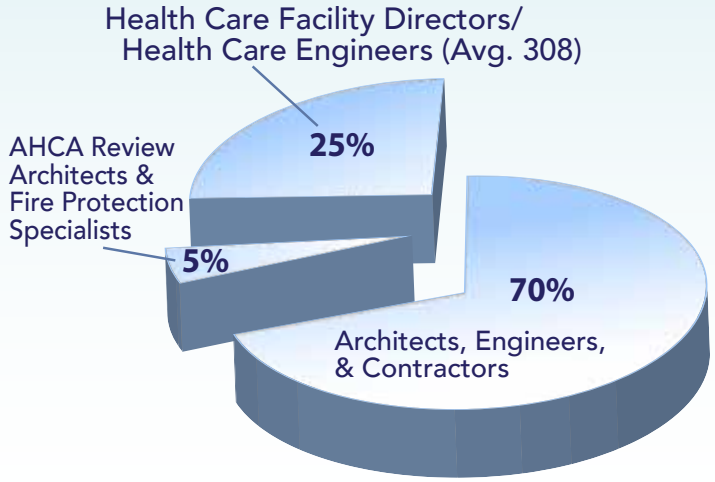

38th Annual AHCA Seminar & Expo

Exhibitor Space Pricing

All 10' x 10' premium corner booths at $1300.

A maximum of two booths can be reserved by any company.

Booths are UNFURNISHED. Booth includes:

- 8' back wall drapes and 3' side rail drapes
- ID sign (7" x 44") with company name and booth number

Expo Exhibitor Booth Price Includes:

- Three (3) Booth Representative Badges per 10' x 10' UNFURNISHED booth – a maximum of 3 additional badges per booth are provided upon request for shifts. (Booth/Expo floor is limited to three reps at any given time. Badges must be checked in before additional badges can be checkout out.)
- Company listing and profile/contact info on AHCA Seminar website
- Company listing in AHCA Seminar printed program which is distributed to all seminar attendees (provided contract/booth payment is received prior to publication deadline)
- Inclusion in AHCA Seminar Event Mobile App floorplan and directory
- Access to AHCA Seminar Event Mobile App for exhibitors and attendees to chat, schedule one-on-one meetings at seminar
- Pre- and post attendee mail list (USPS addresses; email addresses of attendees who opt to share.)
- Opening Reception on AHCA Expo floor, Monday, 4:30-7:00 PM (for 3 reps)
- Complimentary Tuesday breakfast (for AHCA Seminar registrants and Expo exhibitors (3 reps)
- Complimentary Tuesday lunch for Exhibitors (on Expo floor for 3 reps)
- Complimentary tickets for three per booth to AHCA Seminar Opening Meet & Greet, Sunday, 5:30-7:00 PM Complimentary drink ticket, one per entry ticket
- Option to purchase Lead Capture
- Option to purchase lunch tickets to join AHCA Seminar attendees on Monday, Sept. 19
- Priority consideration for on-site hospitality events during AHCA Seminar & Expo dates (times not to coincide with AHCA events).

AGENCY FOR HEALTH CARE ADMINISTRATION
STATE OF FLORIDA

AHCA Seminar Dates

Sunday - Tuesday
Sept. 18-20, 2022

AHCA Expo Hours:

Monday, Sept. 19
4:30 - 7:00 PM (Opening Reception)

Tuesday, Sept. 20
7:00 AM - 2:00 PM (Breakfast & Lunch)

Move-In:
Monday, Sept. 19, 8:00 AM
Move-Out:
Tuesday, Sept. 20, 2:00 PM

TO RESERVE SPACE

Steps to securing a booth:

1. On the Expo page, click the "Reserve Booth" button.
2. On interactive floorplan that comes up, select choices for your booth(s), and proceed to registration/payment.
3. Online Payment: you will be completing an online contract and completing the payment to secure one or two booths.

! NOTE ! **AHCA Expo Management is not responsible for companies being located near competitors.**

This is a live reservation process where multiple companies online at the same moment may not see all information about other users reserving a booth simultaneously. If you are concerned about exhibiting near competitors, we strongly advise you to return to the site later in the day and on subsequent days to check the updated floorplan after you have reserved and paid for your booth. If you find an issue with your location, contact us immediately. We will determine which company reserved their booth first, then if possible shift the second company to an available location of their choosing. If you wait to contact us, we will give you the option to change your location instead.

Booths are assigned by AHCA Expo Management on a first-come, first-paid basis. Questions?
aletheavitray@gmail.com

Name Badges

Three (3) booth rep (Exhibitor) badges will be provided per booth plus a maximum of three (3) additional badges *for shifts only*. (Badges must be turned in to the Expo registration desk before shift badges can be checked out.) Exhibitor badges have access to the Expo floor and public areas only. They do not provide access to educational sessions or food events outside the Expo.

How to register your booth reps: Once you reserve your booth(s), you will receive an invitation to return online to set up your dashboard, complete your profile and register your booth personnel. The information you provide there will be used to make your rep badges, so be sure to complete all pertinent fields. Three booth reps are allowed on the Expo floor and in the booth at any time. Badges will be available for pick up at the Expo registration desk on-site.

Additional Exhibitor badges: Exhibiting companies have the option to register additional Exhibitor booth representatives (not for shifts) at a cost of $155 per registration/badge. These badges provide access to the Expo floor only; they do not provide access to educational sessions or food events outside the Expo. Registration for additional Exhibitor badges can be completed on the Exhibitor's dashboard at any time after the booth is reserved.

Lead Capture

Capture, qualify, and take notes on your leads. Exhibitors purchasing this option will be directed to an easy download of the AHCA Expo Lead Capture App which will enable you to use your own Android or iPhone device as a scanner.

All leads are stored on the cloud as well as in the App, making follow-up effortless. Lead Capture can be purchased at time of booth reservation or you can return later to purchase.

Door Prizes

Exhibitors are welcome to offer a door prize, maximum value $250, at their booth. Eligible recipients for your prize pool can be collected via business cards or through the AHCA Expo Lead Capture App that is available for purchase at time of booth reservation. **How does it work?** Announce/post your winner on the AHCA Seminar Event Mobile App, and invite them to your booth to pick up their prize. Exhibitors are responsible for connecting with winners to present door prizes.

Expo Booth Competition: *Emerging Energy Concepts*

The focus of this year's AHCA Seminar is "Emerging Energy Concepts for the Design and Construction of Health Care Facilities". Exhibitors are encouraged to incorporate this theme into their booth design and participate in our AHCA Expo Booth Competition.

Using the AHCA Seminar Event Mobile App, attendees will cast their votes for the booth they believe best captures the "Energy Concepts" theme, and the winner of the $500 prize will be announced on Tuesday afternoon before the Expo closes at 2:00 PM.

B&I Contractors was voted Best Themed booth in 2021.

The AHCA Seminar & Expo Experience for 2022

Making you our top priority

The AHCA Seminar & Expo is following the Covid-19 health and safety guidelines and recommendations currently set forth by the Centers for Disease Control and Prevention (CDC), county and state authorities, as well as interpretations and recommendations from *Disney's Coronado Springs* Resort and other industry groups.

Please know that the guidelines may change before our meeting in September; however as we move forward, the health, safety, and peace of mind of our attendees and exhibitors is our top priority.

The AHCA Seminar & Expo classroom training and exhibit areas have been designed to follow the recommendations of the above listed authorities for optimal safety and protection of all in attendance.

All attendees, including exhibitors, will be expected to adhere to the health and safety guidelines in effect at the time of this event without exception.

Vision for Connecting!

The AHCA Seminar has always embraced the connections, learning, and networking that takes place outside the classroom. This synergy drives our attendance numbers up each year.

AHCA Seminar Event Mobile App: All attendees and exhibitors will be able to connect before, during, and after the meeting using the AHCA Seminar Mobile App which will include an easy-to-navigate Expo section with interactive floorplan, company profile, chat capability and details and contact information for each exhibiting company. This app will be an invaluable tool during the meeting for attendees to find and contact you.

AHCA Expo Show Decorators

PME Expo Services will be the official service decorator/contractor for the AHCA Expo.

Beginning three months out from the event date (mid-June), the AHCA Expo Exhibitor's Kit will be emailed to the Exhibitor's designated admin contact after booth reservation/payment has been made and the Certificate of Insurance (COI) has been received. This kit will include order forms for booth furniture, electrical, equipment, drayage and labor services, as well as exhibitor schedule for move-in and move-out.

450 Maguire Rd, Suite B • Ocoee, FL 34761

Phone: 407-730-3886

Email: customerservice@my-pme.com

PME Expo Services

Hotel Reservations

The AHCA Seminar & Expo has secured special group room rates at *Disney's Coronado Springs* Resort in Lake Buena Vista, Florida. Your link to make reservations will be provided in your booth confirmation emailed to you. Your booth number will be required to secure a room. There is a limit of three rooms per booth number.

AHCA Expo Exhibitor Policies

It is the responsibility of the exhibiting company's primary contact to see that all booth staff and their contractors are aware of and adhere to AHCA Expo Exhibitor Policies and are also aware of the Terms and Conditions agreed to and in effect for this meeting.

Booth Installation / Tear Down Exhibitor Courtesy

1. Exhibitor move-in begins at 8:00 AM, Monday, Sept. 18, and must be completed by 3:30 PM before the Expo opens at 4:30 PM. It is the exhibiting company's responsibility to make their staff and contractors aware of and ensure their adherence to meeting this schedule. Access during installation will be restricted to Exhibitors and independent contractors with badges only.

2. Exhibits must be staffed during all publicized AHCA Expo hours. Exhibitors must wear badge provided by AHCA Expo at all times.

3. Sound enhancement may be used but the level must be such as to not interfere with adjacent exhibitors. AHCA Expo Management reserves the right to determine at what point sound constitutes interference with others and must be discontinued or modified.

4. Inspection: All exhibits will be inspected during move-in and any Exhibitor deviating from the Booth Design Rules must make modifications to its exhibit space at Exhibitor's expense prior to Expo opening.

5. As a courtesy and for the safety of other exhibitors and to attendees, exhibitors will not be allowed to tear down their booths until the close of the AHCA Expo at 2:00 PM, Tuesday, Sept. 20.

Confines of Booth / Booth Design

Exhibitor's display material shall stay within the allocated 10′ x 10′ space. No exhibit or lighting will be allowed to extend beyond the space assigned to the Exhibitor.

Standard display rules will be in place to address sightline. The maximum height of 8ft is allowed only on the rear half of the booth space, with a 4ft height restriction imposed on all materials in the remaining space forward to the aisle.

Endcap Use of Space -- In endcap booths where Exhibitor has reserved two booths for a 10′ x 20′ space which is oriented perpendicular to adjacent linear booths, the display along the back 20ft of the booth space may only extend at the maximum 8ft height including signage, for 10ft in the center portion to maintain sightline for the adjacent linear booths. Please review illustration below for linear and endcap booth sightline dimensions.

Exhibitors will not be permitted to erect signs or display products in such a manner as to obstruct the view or affect the display of other Exhibitors. Exhibits not conforming to these specifications, or which in design, operation, or otherwise, are deemed objectionable by AHCA Expo Management in its sole discretion, are prohibited.

Linear booth configuration

Illustration depicts 10′x10′ booths with 8′ back drape and 3′ side drapes separating the booths.

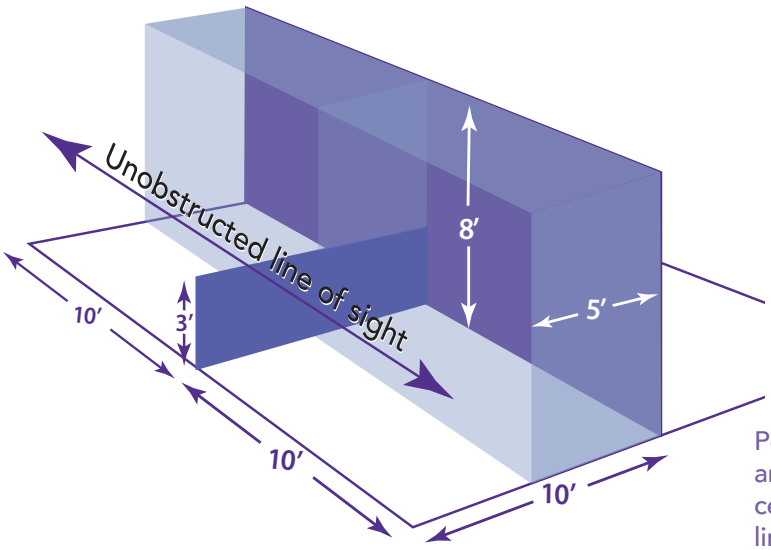

Endcap double booth configuration

two 10′x10′ booths, oriented perpendicularly

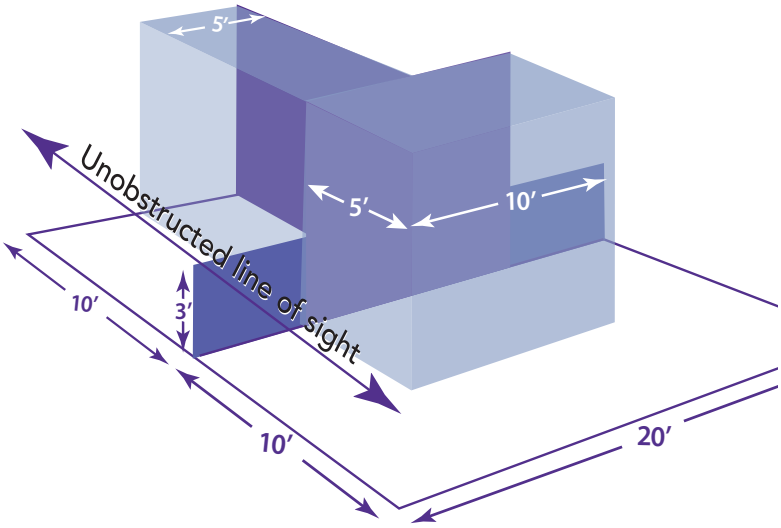

Portions of exhibit taller than 4ft, depicted as translucent blue areas, are restricted to rear area of booth, and restricted to the center rear area of an endcap double booth. This allows line-of-sight down the entire aisle.

Exhibit Access

AHCA Expo Management reserves the right to limit access to the exhibit floor to anyone during times when the AHCA Expo is not officially open.

Food & Beverage at Booth

Arrangements for serving any food and beverage at your booth must be approved by AHCA Expo Management and arranged through *Disney's Coronado Springs* Resort. Use the email address provided below to contact the resort.

***Disney's Coronado Springs* Resort**
wdw.exhibitor.concierge@disney.com

Damage to Property

No part of an exhibit or sign shall be posted, nailed or otherwise attached to columns, walls, floors, or other parts of the building or its furniture, in any way to deface it. The Exhibitor, its agents, guests, or patrons shall not injure, mar, nor in any manner deface *Disney's Coronado Springs* Resort premises or equipment therein, and shall not cause or permit anything to be done whereby *Disney's Coronado Springs* Resort or its equipment shall be in any manner injured, marred, undully soiled, defaced, lost, stolen, or otherwise removed from the building. Damages arising from failure to comply shall be the sole responsibility of the exhibitor.

Photography, Video Recording, and Audio Recording

By attending and exhibiting in the AHCA Seminar you give permission for images of you, captured during the conference through video, photo, and/or digital camera, to be used by AHCA Seminar in promotional materials, publications, and website and waive any and all rights including, but not limited to compensation or ownership.

Exhibitors are permitted to photograph, videotape, and/or audiotape within their own booth space and may photograph, videotape, and/or audiotape AHCA Expo attendees provided permission has been granted by the subject.

Exhibitors may not photograph or videotape other Exhibitors' exhibits. All photography, video, and audio equipment must remain with Exhibitors' booth space and must not disrupt visitor traffic.

Unoccupied Space

Should any reserved booth remain unoccupied after 3:00 PM on Monday, Sept. 19, AHCA Expo Management reserves the right to sell or occupy booth space. If Exhibitor has an emergency causing them to be delayed in setting up their exhibit, please contact Expo Management as soon as possible. aletheavitray@gmail.com